# Work Order ID 68109

*Wednesday, April 06, 2011 2:28:42 PM*



**Item ID:** D3488-042 **Accept** **Setup Start** **Stop**

**Revision ID:**

**Item Name:** Blade Fitting Assembly, RH

**Start Date:** 4/6/2011 **Start Qty:** 12.00 **Cust Item ID:**

**Required Date:** 4/13/2011 **Req'd Qty:** 12.00 **Customer:**

**Reference:**

**Approvals:** **Process Plan:** N **Date:** 11-04-6 **Tooling:** **Date:** **Run Start** **Stop**

**QC:** **Date:** **SPC (Y/N):** **Date:**

| Sequence ID/ Work Center ID | Operation Description | Set Up/ Run Hours | Tool ID | Tool # | Plan Code | Accept Qty | Reject Qty | Reject Number | Insp. Stamp |
|---|---|---|---|---|---|---|---|---|---|
| **Draw Nbr** | **Revision Nbr** | | | | | | | | |
| D3488 | Rev B | | | | | | | | |
| 100 | DOOSAN LATHE | 0.00 | | | | 12 | φ | | |
| Doosan | **Memo** | 0.00 | | | | | | | |
| Doosan Lathe | 1-Turn as per Dwg DSK 101 & Folio FA627□2-Deburr | | | | | | | | |
| 110 | QC2- Inspect parts off machine FAI/FAIB | 0.00 | | | | 12 | φ | | |
| QC | **Memo** | 0.00 | | | | | | | |
| Quality Control | | | | | | | | | |
| 120 | HAAS CNC VERTICAL MACHINING #1 | 0.00 | | | | | φ | | |
| HAAS 1 | **Memo** | 0.00 | | | | | | | |
| HAAS CNC vertical machine #1 | 1-Machine as per Folio FA627 & Dwg D3488□2-Deburr | | | | | 12 | | | |

Dart Aerospace Ltd

| W/O: | | WORK ORDER CHANGES | | | | | |
|---|---|---|---|---|---|---|---|
| DATE | STEP | PROCEDURE CHANGE | By | Date | Qty | Approval Chief Eng / Prod Mgr | Approval QC Inspector |
| | | | | | | | |
| | | | | | | | |

**Part No:** _____ **PAR #:** _____ **Fault Category:** _____ **NCR:** Yes No **DQA:** _____ **Date:** _____

**Resolution:** _____ **Disposition:** _____ **QA: N/C Closed:** _____ **Date:** _____

| NCR: | | WORK ORDER NON-CONFORMANCE (NCR) | | | | | | |
|---|---|---|---|---|---|---|---|---|
| DATE | STEP | Description of NC Section A | Corrective Action Section B | | | Verification Section C | Approval Chief Eng | Approval QC Inspector |
| | | | Initial Chief Eng | Action Description Chief Eng | Sign & Date | | | |
| | | | | | | | | |
| | | | | | | | | |
| | | | | | | | | |

**NOTE:** Date & initial all entries

# Work Order ID 68109

*Wednesday, April 06, 2011 2:28:42 PM*



**Item ID:** D3488-042 **Accept** **Setup Start** **Stop**

**Revision ID:**

**Item Name:** Blade Fitting Assembly, RH

**Start Date:** 4/6/2011 **Start Qty:** 12.00 **Cust Item ID:**

**Required Date:** 4/13/2011 **Req'd Qty:** 12.00 **Customer:**

**Reference:**

**Run Start** **Stop**

**Approvals:** **Process Plan:** _____ **Date:** _____ **Tooling:** _____ **Date:** _____

**QC:** _____ **Date:** _____ **SPC (Y/N):** _____ **Date:** _____

| Sequence ID/ Work Center ID | Operation Description | Set Up/ Run Hours | Tool ID | Tool # | Plan Code | Accept Qty | Reject Qty | Reject Number | Insp. Stamp |
|---|---|---|---|---|---|---|---|---|---|
| 130 QC Quality Control | QC2- Inspect parts off machine FAI/FAIB | 0.00 | 11/05/04 | | | 12 | ϕ | | |
| | Memo | 0.00 | | | | | | | |
| 140 QC Quality Control | QC8- Inspect parts - second check | 0.00 | 11/05/04 | | | 12 | ϕ | | |
| | Memo | 0.00 | | | | | | | |
| 150 HandFinish Hand Finishing | Chemical Conversion Coat per QSI005 4.1 | 0.00 | | | | 12 | BK | 11-5-02 | |
| | Memo | 0.00 | | | | | | | |

Dart Aerospace Ltd

| W/O: | | WORK ORDER CHANGES | | | | | |
|---|---|---|---|---|---|---|---|
| DATE | STEP | PROCEDURE CHANGE | By | Date | Qty | Approval Chief Eng / Prod Mgr | Approval QC Inspector |
| | | | | | | | |
| | | | | | | | |

**Part No:** _____ **PAR #:** _____ **Fault Category:** _____ **NCR:** Yes No **DQA:** _____ **Date:** _____

**Resolution:** _____ **Disposition:** _____ **QA: N/C Closed:** _____ **Date:** _____

| NCR: | | WORK ORDER NON-CONFORMANCE (NCR) | | | | | | |
|---|---|---|---|---|---|---|---|---|
| DATE | STEP | Description of NC Section A | Corrective Action Section B | | | Verification Section C | Approval Chief Eng | Approval QC Inspector |
| | | | Initial Chief Eng | Action Description Chief Eng | Sign & Date | | | |
| | | | | | | | | |
| | | | | | | | | |
| | | | | | | | | |

**NOTE:** Date & initial all entries

# Work Order ID 68109

*Wednesday, April 06, 2011 2:28:42 PM*



**Item ID:** D3488-042 **Accept** **Setup Start** **Stop**

**Revision ID:**

**Item Name:** Blade Fitting Assembly, RH

**Start Date:** 4/6/2011 **Start Qty:** 12.00 **Cust Item ID:**

**Required Date:** 4/13/2011 **Req'd Qty:** 12.00 **Customer:**

**Reference:**

**Run Start** **Stop**

**Approvals:** **Process Plan:** _____ **Date:** _____ **Tooling:** _____ **Date:** _____

**QC:** _____ **Date:** _____ **SPC (Y/N):** _____ **Date:** _____

| Sequence ID/ Work Center ID | Operation Description | Set Up/ Run Hours | Tool ID | Tool # | Plan Code | Accept Qty | Reject Qty | Reject Number | Insp. Stamp |
|---|---|---|---|---|---|---|---|---|---|
| 160 | White Gloss(Ref:4.3.5.1) per QSI005 4.3-Alum | 0.00 | | | | | | | |
| Powdercoat | **Memo** | 0.00 | | | | | | | |
| Powder Coating | START TIME: 9:30 ☐OVEN TEMPERATURE: 320 ☐FINISH TIME: 10:00 | | | | | | | | |
| M116964 | | | | | | 12x | ø | m-L | 11/05/16 |
| 170 | QC3- Inspect Part Finish | 0.00 | | | | | | | |
| QC | **Memo** | 0.00 | | | | | | | |
| Quality Control | | | | | | 12 | | RR | 11-5-16. |
| 180 | | 0.00 | | | | | | | |
| HandFinish | HandFinishing | | | | | | | | |
| Hand Finishing | **Memo** | 0.00 | | | | | | | |
| | ✓ Install Inserts as per Dwg D3488 | | | | | 12 | ø | M | 11/5/17 |

Dart Aerospace Ltd

| W/O: | | WORK ORDER CHANGES | | | | | |
|---|---|---|---|---|---|---|---|
| DATE | STEP | PROCEDURE CHANGE | By | Date | Qty | Approval Chief Eng / Prod Mgr | Approval QC Inspector |
| | | | | | | | |
| | | | | | | | |

**Part No:** _____ **PAR #:** _____ **Fault Category:** _____ **NCR:** Yes No **DQA:** _____ **Date:** _____

**Resolution:** _____ **Disposition:** _____ **QA: N/C Closed:** _____ **Date:** _____

| NCR: | | WORK ORDER NON-CONFORMANCE (NCR) | | | | | | |
|---|---|---|---|---|---|---|---|---|
| DATE | STEP | Description of NC Section A | Corrective Action Section B | | | Verification Section C | Approval Chief Eng | Approval QC Inspector |
| | | | Initial Chief Eng | Action Description Chief Eng | Sign & Date | | | |
| | | | | | | | | |
| | | | | | | | | |
| | | | | | | | | |

**NOTE:** Date & initial all entries

H:\fFORMS\Quality Assurance\approved QA\NCRWO RevE

# Work Order ID 68109

*Wednesday, April 06, 2011 2:28:42 PM*



**Item ID:** D3488-042 **Accept** **Setup Start** **Stop**

**Revision ID:**

**Item Name:** Blade Fitting Assembly, RH

**Start Date:** 4/6/2011 **Start Qty:** 12.00 **Cust Item ID:**

**Required Date:** 4/13/2011 **Req'd Qty:** 12.00 **Customer:**

**Reference:**

**Run Start** **Stop**

**Approvals:** **Process Plan:** _____ **Date:** _____ **Tooling:** _____ **Date:** _____

**QC:** _____ **Date:** _____ **SPC (Y/N):** _____ **Date:** _____

| Sequence ID/ Work Center ID | Operation Description | Set Up/ Run Hours | Tool ID | Tool # | Plan Code | Accept Qty | Reject Qty | Reject Number | Insp. Stamp |
|---|---|---|---|---|---|---|---|---|---|
| 190 QC Quality Control | QC5- Inspect part completeness to step on W/O | 0.00 | | | | 12 | | | |
| | Memo | 0.00 | | | | | | | |
| 200 Packaging Packaging | Identify as per dwg & Stock Location: FP. 8 | 0.00 | | | | 12 | 4 | | 11/04/17 |
| | Memo | 0.00 | | | | | | | |
| 210 QC Quality Control | QC21- Final Inspection - Work Order Release | 0.00 | | | | | | 11/5/18 | |
| | Memo | 0.00 | | | | | | | |

11-05-17

Dart Aerospace Ltd

| W/O: | | WORK ORDER CHANGES | | | | | |
|---|---|---|---|---|---|---|---|
| DATE | STEP | PROCEDURE CHANGE | By | Date | Qty | Approval Chief Eng / Prod Mgr | Approval QC Inspector |
| | | | | | | | |
| | | | | | | | |

**Part No:** _____ **PAR #:** _____ **Fault Category:** _____ **NCR:** Yes No **DQA:** _____ **Date:** _____

**Resolution:** _____ **Disposition:** _____ **QA: N/C Closed:** _____ **Date:** _____

| NCR: | | WORK ORDER NON-CONFORMANCE (NCR) | | | | | | |
|---|---|---|---|---|---|---|---|---|
| DATE | STEP | Description of NC Section A | Corrective Action Section B | | | Verification Section C | Approval Chief Eng | Approval QC Inspector |
| | | | Initial Chief Eng | Action Description Chief Eng | Sign & Date | | | |
| | | | | | | | | |
| | | | | | | | | |
| | | | | | | | | |

**NOTE:** Date & initial all entries

H:\fFORMS\Quality Assurance\approved QA\NCRWO RevE

# Picklist Print

*Wednesday, April 06, 2011 2:28:48 PM*



**Work Order ID:** 68109

**Parent Item:** D3488-042

**Parent Item Name:** Blade Fitting Assembly, RH

**Start Date:** 4/6/2011 **Required Date:** 4/13/2011

**Start Qty:** 12.00 **Required Qty:** 12.00

**Comments:**
IPP Rev:A New Issue 06-02-28 JLM
IPP Rev:B As per Rev B 06-03-30 JLM
IPP Rev:C Now On Doosan Lathe JLM Verified BY:DD

| Component Item ID/ Item Name | Replacement Item ID | Mfg/ Purch | Bin Item | Primary Location | Last Location | Route Seq ID | Unit of Measure | Qty on Hand | Qty per Kit | Total Qty | Qty Issued | Date Issued | Status |
|---|---|---|---|---|---|---|---|---|---|---|---|---|---|
| ALS7-1032-225<br>INSERT | | Purchased | No | | | | Each | 700.0000 | | 48<br>M 4/05/17 | | | |

| Location | Loc Qty | Loc Code |
|---|---|---|
| ST282 | 700 | |
| 100896 | 100 | MM10768 x48 |
| 111529 | 300 | |
| 111581 | 300 | |

| Component Item ID/ Item Name | Replacement Item ID | Mfg/ Purch | Bin Item | Primary Location | Last Location | Route Seq ID | Unit of Measure | Qty on Hand | Qty per Kit | Total Qty | Qty Issued | Date Issued | Status |
|---|---|---|---|---|---|---|---|---|---|---|---|---|---|
| D6103-003<br>Round Billet, Aluminum | | Manufactured | No | | | | Each | 6.0000 | | 12<br>RR 11.5.18 | | | |

| Location | Loc Qty | Loc Code |
|---|---|---|
| MAT043 | 6 | |
| 55430 | 3 | |
| 65955 | 3 | |
| 68173 | (x12) | |

Dart Aerospace Ltd

| W/O: | | WORK ORDER CHANGES | | | | | |
|---|---|---|---|---|---|---|---|
| DATE | STEP | PROCEDURE CHANGE | By | Date | Qty | Approval Chief Eng / Prod Mgr | Approval QC Inspector |
| | | | | | | | |
| | | | | | | | |

**Part No:** _____ **PAR #:** _____ **Fault Category:** _____ **NCR:** Yes No **DQA:** _____ **Date:** _____

**Resolution:** _____ **Disposition:** _____ **QA: N/C Closed:** _____ **Date:** _____

| NCR: | | WORK ORDER NON-CONFORMANCE (NCR) | | | | | | |
|---|---|---|---|---|---|---|---|---|
| DATE | STEP | Description of NC Section A | Corrective Action Section B | | | Verification Section C | Approval Chief Eng | Approval QC Inspector |
| | | | Initial Chief Eng | Action Description Chief Eng | Sign & Date | | | |
| | | | | | | | | |
| | | | | | | | | |
| | | | | | | | | |

**NOTE:** Date & initial all entries

| DART AEROSPACE LTD | Work Order: | 68109 |
|---|---|---|
| | | |
| **Description:** Blade Fitting, RH / Turning Detail for D3488-1/-2 | **Part Number:** | D3488-2 |
| | | |
| **Inspection Dwg:** D3488 / DSK101 **Rev:** B / D | | Page 1 of 2 |

## FIRST ARTICLE INSPECTION CHECKLIST

[X] First Article [ ] Prototype

| Drawing Dimension | Tolerance | Actual Dimension | Accept | Reject | Method of Inspection | Comments |
|---|---|---|---|---|---|---|
| **Lathe Section** | | | | | | |
| Ø2.150 | +/-0.005 | 2.145 | ✓ | | RG-02 | |
| Ø2.780 | +/-0.005 | 2.780 | ✓ | | All. | |
| Ø3.125 | +/-0.010 | 3.125 | ✓ | | | |
| Ø3.346 | +/-0.010 | 3.347 | ✓ | | | |
| 0.125 x 45° | +/-0.010 x +/-0.1° | .125x45° | ✓ | | | |
| 8.000 | +0.030/-0.000 | 8.015 | ✓ | | | |
| 9.250 | +/-0.010 | 9.250 | ✓ | | | |
| 0.188 | +/-0.010 | .188 | ✓ | | | |
| R0.032 | +/-0.010 | R.032 | ✓ | | | |
| R0.062 | +/-0.010 | R.062 | ✓ | | | |
| Ø0.297 | +0.005/-0.001 | .298 | ✓ | | | |
| Ø0.430 | +/-0.010 | .430 | ✓ | | | |
| 0.100 | +/-0.010 | .100 | ✓ | | | |
| 0.125 | +/-0.010 | .128 | ✓ | | | |
| 2.620 | +/-0.010 | 2.620 | ✓ | | | |
| 3.500 | +/-0.010 | 3.500 | ✓ | | | |
| 1.005 | +/-0.010 | 1.005 | ✓ | | | |
| Ø0.484 | +0.005/-0.001 | .484 | ✓ | | | |
| 1.180 | +/-0.010 | 1.180 | ✓ | | | |
| 3.150 | +/-0.010 | 3.150 | ✓ | | | |
| 3.070 | +/-0.010 | 3.070 | ✓ | | | |
| R0.063 | +/-0.010 | R.063 | ✓ | | | |
| | | | | | | |
| | | | | | | |

Dart Aerospace Ltd

| W/O: | | WORK ORDER CHANGES | | | | | |
|---|---|---|---|---|---|---|---|
| DATE | STEP | PROCEDURE CHANGE | By | Date | Qty | Approval Chief Eng / Prod Mgr | Approval QC Inspector |
| | | | | | | | |
| | | | | | | | |

**Part No:** _____ **PAR #:** _____ **Fault Category:** _____ **NCR:** Yes No **DQA:** _____ **Date:** _____

**Resolution:** _____ **Disposition:** _____ **QA: N/C Closed:** _____ **Date:** _____

| NCR: | | WORK ORDER NON-CONFORMANCE (NCR) | | | | | | |
|---|---|---|---|---|---|---|---|---|
| DATE | STEP | Description of NC Section A | Corrective Action Section B | | | Verification Section C | Approval Chief Eng | Approval QC Inspector |
| | | | Initial Chief Eng | Action Description Chief Eng | Sign & Date | | | |
| | | | | | | | | |
| | | | | | | | | |
| | | | | | | | | |

**NOTE:** Date & initial all entries

| DART AEROSPACE LTD | Work Order: | 68109 |
|---|---|---|
| | | |
| **Description:** Blade Fitting, RH / Turning Detail for D3488-1/-2 | Part Number: | D3488-2 |
| | | |
| **Inspection Dwg:** D3488 / DSK101 **Rev:** B / D | | Page 2 of 2 |

| Drawing Dimension | Tolerance | Actual Dimension | Accept | Reject | Method of Inspection | Comments |
|---|---|---|---|---|---|---|
| **Milling Section** | | | | | | |
| Ø0.508 | +0.006/-0.001 | .509 | ✓ | | Vernal3 | |
| 0.750 | +/-0.010 | .751 | ✓ | | H-G | |
| 1.500 | +/-0.010 | 1.500 | ✓ | | " | |
| 11.18 | +/-0.030 | 11.183 | ✓ | | H-G | |
| R0.062 | +/-0.010 | .062 | ✓ | | R-G | |
| 0.125 | +/-0.010 | .128 | ✓ | | " | |
| 0.590 | +/-0.010 | .590 | ✓ | | H/G | |
| 0.793 | +/-0.010 | .796 | ✓ | | H-G | |
| 1.351 | +/-0.010 | 1.347 | ✓ | | " | |
| 1.317 | +/-0.010 | 1.316 | ✓ | | " | |
| 1.802 | +/-0.010 | 1.806 | ✓ | | H-G | |
| | | | | | | |
| | | | | | | |
| | | | | | | |

| Measured by: | [illegible] | Audited by: | [illegible] | Prototype Approval: | N/A |
|---|---|---|---|---|---|
| Date: | 11.4.25 / 11/15/03 | Date: | 11/05/04 | Date: | N/A |

| Rev | Date | Change | Revised by | Approved |
|---|---|---|---|---|
| A | 06.03.31 | New Issue | KJ/JLM | |
| B | 08.09.19 | Reformat P/O D3488-042 | KJ/JLM | |
| C | 08.12.02 | Dimension 8.000 removed | KJ/JLM | |

Dart Aerospace Ltd

| W/O: | | WORK ORDER CHANGES | | | | | |
|---|---|---|---|---|---|---|---|
| DATE | STEP | PROCEDURE CHANGE | By | Date | Qty | Approval Chief Eng / Prod Mgr | Approval QC Inspector |
| | | | | | | | |
| | | | | | | | |

**Part No:** _____ **PAR #:** _____ **Fault Category:** _____ **NCR:** Yes No **DQA:** _____ **Date:** _____

**Resolution:** _____ **Disposition:** _____ **QA: N/C Closed:** _____ **Date:** _____

| NCR: | | WORK ORDER NON-CONFORMANCE (NCR) | | | | | | |
|---|---|---|---|---|---|---|---|---|
| DATE | STEP | Description of NC Section A | Corrective Action Section B | | | Verification Section C | Approval Chief Eng | Approval QC Inspector |
| | | | Initial Chief Eng | Action Description Chief Eng | Sign & Date | | | |
| | | | | | | | | |
| | | | | | | | | |
| | | | | | | | | |

**NOTE:** Date & initial all entries

H:\FORMS\Quality Assurance\approved QA\NCRWO RevE

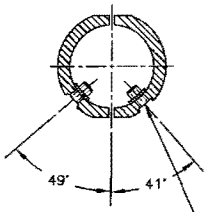


SECTION B–B

ø0.297
C'BORE ø0.430 x 0.100
INSTALL ALS4–1032–225 (OR AKS4–1032–225
OR ALS7–1032–225 OR AKS7–1032–225)
INSERTS AFTER FINISH
(4 PLACES)

4

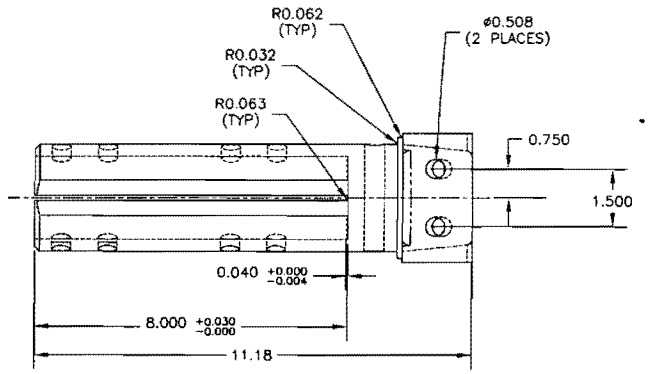


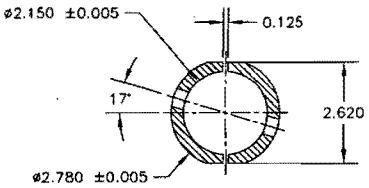


SECTION A–A

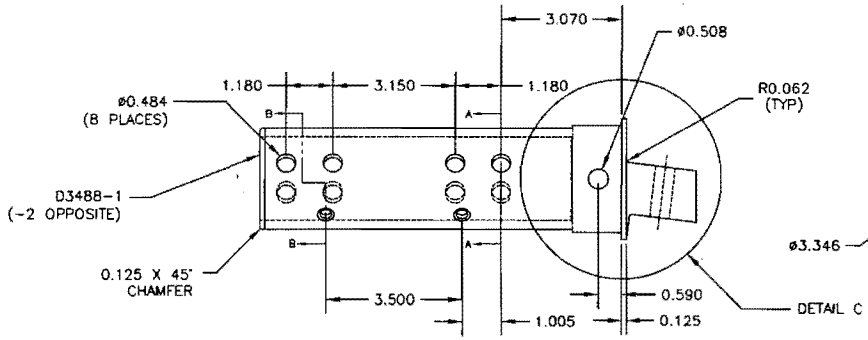


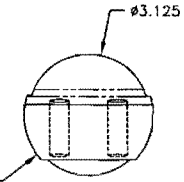


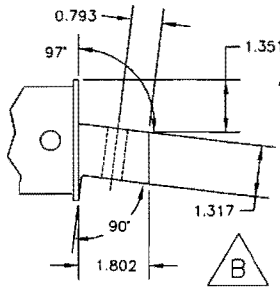


DETAIL C

D3488–041 SHOWN (D3488–042 OPPOSITE)

RELEASED
06.03.15 PH
REV B
ECN #737

**D3488–041/–042 BLADE FITTING ASSEMBLY PARTS LIST**

| QTY -041 | QTY -042 | PART NUMBER | DESCRIPTION |
|---|---|---|---|
| X | | D3488-041 | BLADE FITTING ASSEMBLY (LH) |
| | X | D3488-042 | BLADE FITTING ASSEMBLY (RH) |
| | | | |
| 1 | | D3488-1 | BLADE FITTING (LH) |
| | 1 | D3488-2 | BLADE FITTING (RH) |
| | | | |
| 4 | 4 | ALS4-1032-225 or AKS4-1032-225 or ALS7-1032-225 or AKS7-1032-225 | INSERT |

D3488–041/–042 BLADE FITTING

1) MATERIAL: MAKE D3488–1/–2 FROM ALUMINUM 7075–T7351 ROUND BAR PER QQ–A–225/9 (REF. DART MATERIAL SPEC M7075T73R)
2) FINISH: ACID ETCH, ALODINE PER DART QSI 005 4.1
POWDER COAT WHITE (REF 4.3.5.1) PER DART QSI 005 4.3
3) BREAK UNMARKED SHARP EDGES 0.010 TO 0.020
4) INSTALL INSERTS AFTER POWDER COAT
5) ALL DIMENSIONS ARE IN INCHES
6) TOLERANCES ARE PER DART QSI 018 UNLESS OTHERWISE NOTED

| | | |
|---|---|---|
| B | 06.03.15 | CHANGE THICKNESS |
| A | 05.12.20 | NEW ISSUE |



| | | | |
|---|---|---|---|
| DESIGN PH | DRAWN BY PH | DART AEROSPACE USA, INC. PORT HADLOCK, WA | |
| CHECKED | APPROVED | DRAWING NO. D3488 | REV. B SHEET 1 OF 1 |
| DATE 06.03.15 | | TITLE BLADE FITTING | SCALE 1:3 |

Dart Aerospace Ltd

| W/O: | | WORK ORDER CHANGES | | | | | |
|---|---|---|---|---|---|---|---|
| DATE | STEP | PROCEDURE CHANGE | By | Date | Qty | Approval Chief Eng / Prod Mgr | Approval QC Inspector |
| | | | | | | | |
| | | | | | | | |

Part No: _____ PAR #: _____ Fault Category: _____ NCR: Yes No DQA: _____ Date: _____

Resolution: _____ Disposition: _____ QA: N/C Closed: _____ Date: _____

| NCR: | | WORK ORDER NON-CONFORMANCE (NCR) | | | | | | |
|---|---|---|---|---|---|---|---|---|
| DATE | STEP | Description of NC Section A | Corrective Action Section B | | | Verification Section C | Approval Chief Eng | Approval QC Inspector |
| | | | Initial Chief Eng | Action Description Chief Eng | Sign & Date | | | |
| | | | | | | | | |
| | | | | | | | | |
| | | | | | | | | |

**NOTE:** Date & initial all entries

H:\fFORMS\Quality Assurance\approved QA\NCRWO RevE